REV. NO.	DATE	DESCRIPTION	APP'D	REMARKS
1	-	-	-	-

0

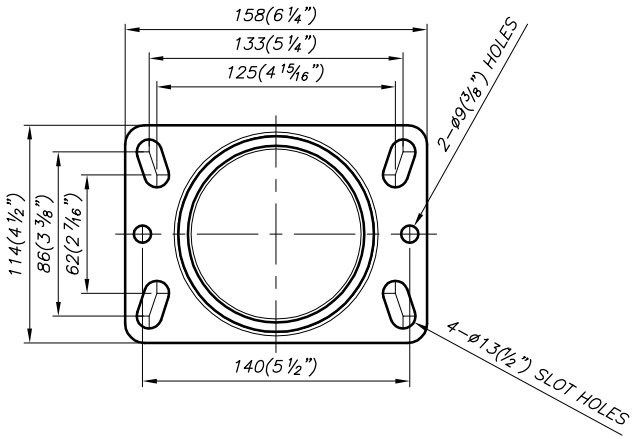

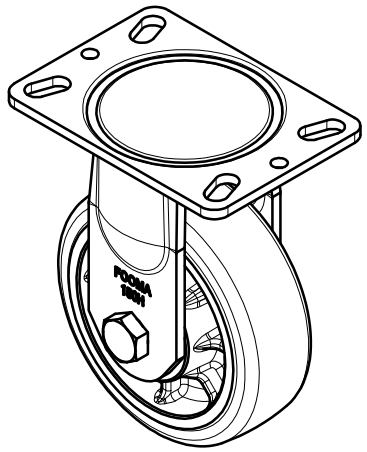

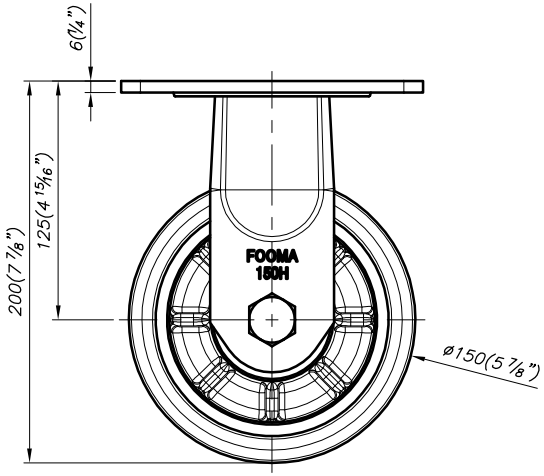

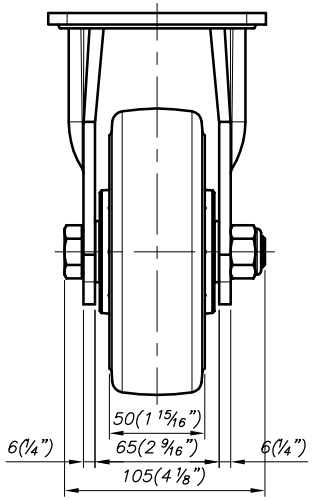

NOTE

주1) LOAD CAPACITY : 650KG/EA

주2) SURFACE TREATMENT : POWDER COATED & ZINC GALVANIZED

PROCESS	--
MATERIAL	--

APPROVED BY	CHECKED BY	DRAWN BY
O.C.K	J.Y.H	J.T.H

PRODUCT GENERAL TOLERANCE

CASTER HEIGHT		WHEEL OUTER DIAMETER		WHEEL HUB WIDTH	
PRECISION(I)	GENERAL(II)	PRECISION(I)	GENERAL(II)	PRECISION(I)	GENERAL(II)
±0.5% (MIN:±0.5mm)	±1% (MIN:±1mm)	±0.5% (MIN:±0.5mm)	±1% (MIN:±1mm)	-1% (MIN:-0.5mm)	-2% (MIN:-1mm)

GENERAL TOLERANCE

CHAMFER	0.5	ROUND	0.5	UNIT	mm

MACHINING, WORKING			DIE CASTING(3)			INJECTION MOLDING			PRESS WORKING					
RANGE	PRECISION (I)	GENERAL (II)	RANGE	Hot forging precision	Hot forging general	RANGE	PRECISION (I)	GENERAL (II)	RANGE	I	II	I	II	I	II
0.5 ~ 6	±0.05	±0.1	1~3	±0.3	±0.5	1~6	±0.3	±0.5	1~3	±0.1	±0.1	±0.1	±0.1	±0.1	±1
6 ~ 30	±0.1	±0.2	3~6	±0.1	±0.5	6~9	±0.3	±0.5	3~10	±0.15	±0.1	±0.1	±0.1	±0.1	±0.5
30 ~ 120	±0.15	±0.3	6~10	±0.3	±0.6	9~13	±0.4	±0.6	10~18	±0.2	±0.1	±0.1	±0.2	±0.1	±0.5
120 ~ 400	±0.2	±0.5	10~18	±0.6	±0.7	13~19	±0.5	±0.8	18~30	±0.2	±0.1	±0.2	±0.2	±0.1	±0.8
400 ~ 1000	±0.3	±0.8	18~30	±0.5	±0.8	19~30	±0.6	±0.8	30~300	±0.5	±0.2	±0.3	±0.3	±0.2	±0.8

NO.	DESCRIPTION	UNIT	Q'TY	MATERIAL	WEIGHT	SPECIFICATION	REMARKS
--	--	-	-	-	-	-	-

FOOT MASTER® | FOOMA® | G-DOK IND.

SERIES NAME	GHP-SERIES	DATE	2024.04.26	GSN NO.	5E121-1111111
PRODUCT NAME	GHP-150-ARF-MUD	SCALE	1/3	DWG. NO.	5E121-1111111
		WEIGHT	--	REVISION	0
PART NAME	ASSEMBLY	GENERAL TOLERANCE	B	SIZE	A3
				ANGLE	

FOOT MASTER G-DOK IND.

FOOT MASTER G-DOK IND.

VERSION:20230808

REV. NO.	DATE	DESCRIPTION	APP'D	REMARKS
1	-	-	-	-

0

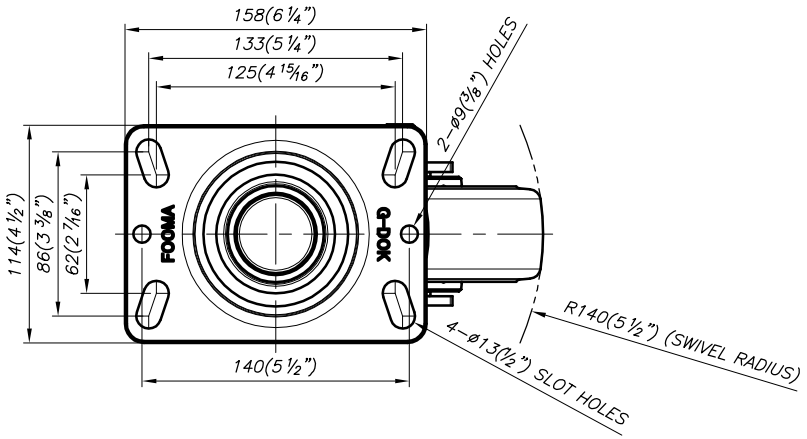

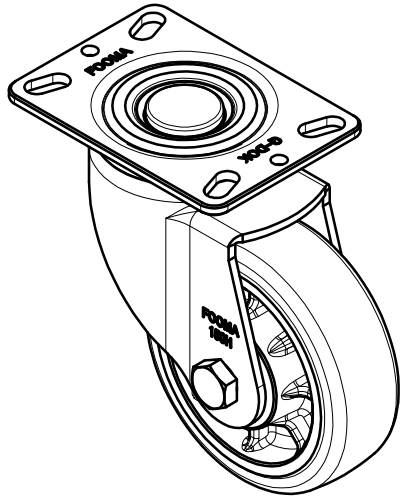

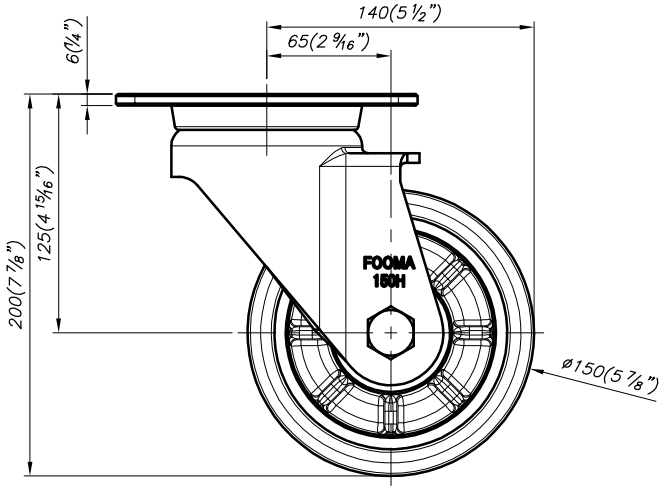

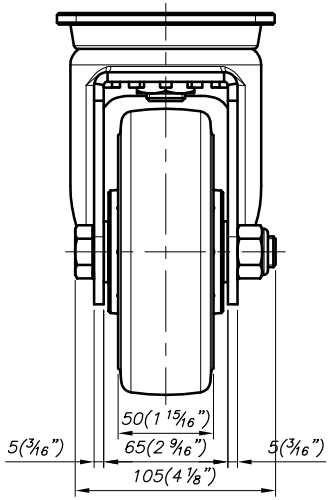

NOTE

주1) LOAD CAPACITY : 650KG/EA

주2) SURFACE TREATMENT : POWDER COATED & ZINC GALVANIZED

PROCESS	--		
MATERIAL	--		
APPROVED BY	CHECKED BY	DRAWN BY	
O.C.K	J.Y.H	J.T.H	

PRODUCT GENERAL TOLERANCE

CASTER HEIGHT		WHEEL OUTER DIAMETER		WHEEL HUB WIDTH	
PRECISION(A)	GENERAL(B)	PRECISION(A)	GENERAL(B)	PRECISION(A)	GENERAL(B)
±0.5% (MIN:±0.5mm)	±1% (MIN:±1mm)	±0.5% (MIN:±0.5mm)	±1% (MIN:±1mm)	-1% (MIN:-0.5mm)	-2% (MIN:-1mm)

GENERAL TOLERANCE

MACHINING, WORKING			DIE CASTING(C)			INJECTION MOLDING			PRESS WORKING					
RANGE	PRECISION (A)	GENERAL (B)	RANGE	PRECISION (A)	GENERAL (B)	RANGE	PRECISION (A)	GENERAL (B)	RANGE	A	B	C	D
0.5 ~ 6	±0.05	±0.1	1~3	±0.3	±0.5	1~6	±0.3	±0.5	1~3	±0.1	±0.1	±0.3	±1
6 ~ 30	±0.1	±0.2	3~8	±0.1	±0.5	6~9	±0.3	±0.4	3~10	±0.5	±0.1	±0.4	±0.5
30 ~ 120	±0.15	±0.3	8~18	±0.3	±0.4	9~18	±0.4	±0.6	10~18	±0.1	±0.5	±1.2	±0.5
120 ~ 400	±0.2	±0.5	18~30	±0.6	±0.7	18~30	±0.5	±0.8	18~30	±0.1	±0.8	±0.9	±0.8
400 ~ 1000	±0.3	±0.8	30~80	±0.5	±0.8	30~80	±0.5	±0.8	30~80	±0.5	±1.2	±0.9	±0.8

CHAMFER	0.5	ROUND	0.5	UNIT	mm

NO.	DESCRIPTION	UNIT	Q'TY	MATERIAL	WEIGHT	SPECIFICATION	REMARKS
--	--	-	-	-	-	-	-

FOOT MASTER® FOOMA® G-DOK IND.

SERIES NAME	GHP-SERIES	DATE	2024.04.26	GSN NO.	5E111-1111111
PRODUCT NAME	GHP-150-ASF-MUD	SCALE	1/3	DWG. NO.	5E111-1111111
		WEIGHT	--	REVISION	0
PART NAME	ASSEMBLY	GENERAL TOLERANCE	B	SIZE	A3
				ANGLE	

FOOT MASTER G-DOK IND. FOOT MASTER G-DOK IND. FOOT MASTER

VERSION:20230808

REV. NO.	DATE	DESCRIPTION	APP'D	REMARKS
1	-	-	-	-

0

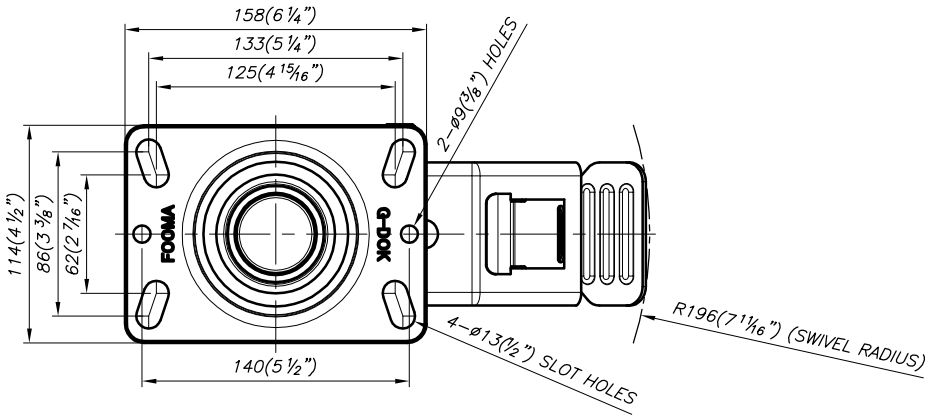

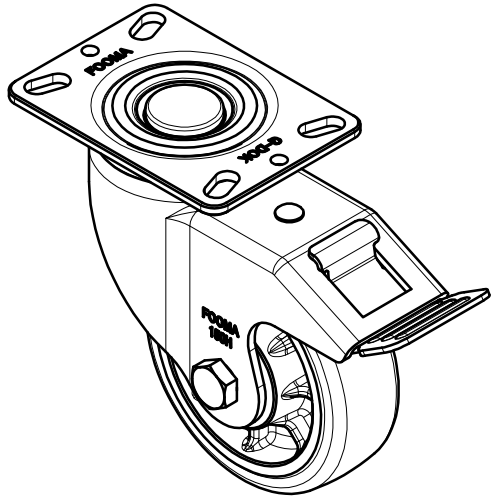

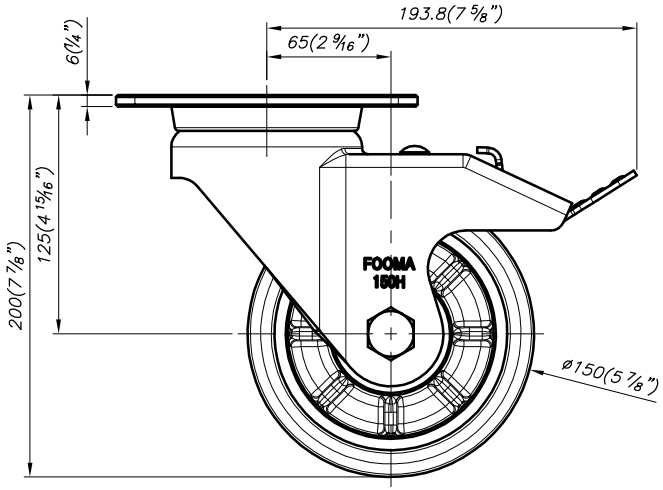

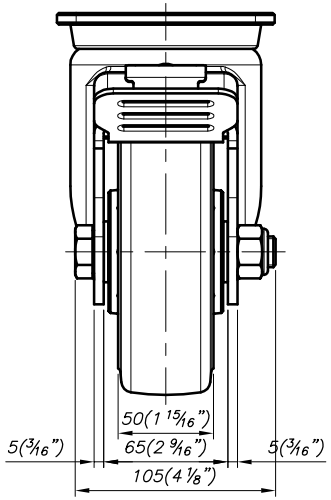

NOTE

주1) LOAD CAPACITY : 650KG/EA

주2) SURFACE TREATMENT : POWDER COATED & ZINC GALVANIZED

NO.	DESCRIPTION	UNIT	Q'TY	MATERIAL	WEIGHT	SPECIFICATION	REMARKS
--	--	-	-	-	-	-	-

PROCESS	--		
MATERIAL	--		
APPROVED BY	CHECKED BY	DRAWN BY	
O.C.K	J.Y.H	J.T.H	

PRODUCT GENERAL TOLERANCE

CASTER HEIGHT		WHEEL OUTER DIAMETER		WHEEL HUB WIDTH	
PRECISION(%)	GENERAL(%)	PRECISION(%)	GENERAL(%)	PRECISION(%)	GENERAL(%)
±0.5% (MIN:±0.5mm)	±1% (MIN:±1mm)	±0.5% (MIN:±0.5mm)	±1% (MIN:±1mm)	-1% (MIN:-0.5mm)	-2% (MIN:-1mm)

GENERAL TOLERANCE

MACHINING, WORKING			DIE CASTING(2)			INJECTION MOLDING			PRESS WORKING					
RANGE	PRECISION (1)	GENERAL (2)	RANGE	Hot forging precision	Hot forging general	RANGE	PRECISION (1)	GENERAL (2)	RANGE	Blanking	Bending	Drawing	Forming	Cutting
0.5 ~ 6	±0.05	±0.1	1~3	±0.3	±0.5	1~6	±0.8	±0.3	1~3	±0.1	±0.1	±0.1	±0.1	±1
6 ~ 30	±0.1	±0.2	3~6	±0.1	±0.5	6~9	±0.5	±0.1	3~10	±0.5	±0.1	±0.1	±0.1	±0.5
30 ~ 120	±0.15	±0.3	6~10	±0.3	±0.6	9~18	±0.4	±0.1	10~18	±0.8	±0.1	±0.5	±0.2	±0.5
120 ~ 400	±0.2	±0.5	10~18	±0.5	±0.7	18~30	±0.5	±0.2	18~30	±0.1	±0.3	±0.1	±0.3	±0.8
400 ~ 1000	±0.3	±0.8	18~30	±0.5	±0.8	30~50	±0.5	±0.2	30~50	±0.5	±0.2	±0.3	±0.3	±0.8

CHAMFER	0.5	ROUND	0.5	UNIT	mm

FOOT MASTER® FOOMA® G-DOK IND.

SERIES NAME	GHP-SERIES	DATE	2024.04.26
PRODUCT NAME	GHP-150-BSF-MUD	SCALE	1/3
PART NAME	ASSEMBLY	WEIGHT	--
		GENERAL TOLERANCE	B

GSN NO.	5E131-1111111
DWG. NO.	5E131-1111111
REVISION	0
SIZE	A3
ANGLE	

FOOT MASTER G-DOK IND.

VERSION:20230808