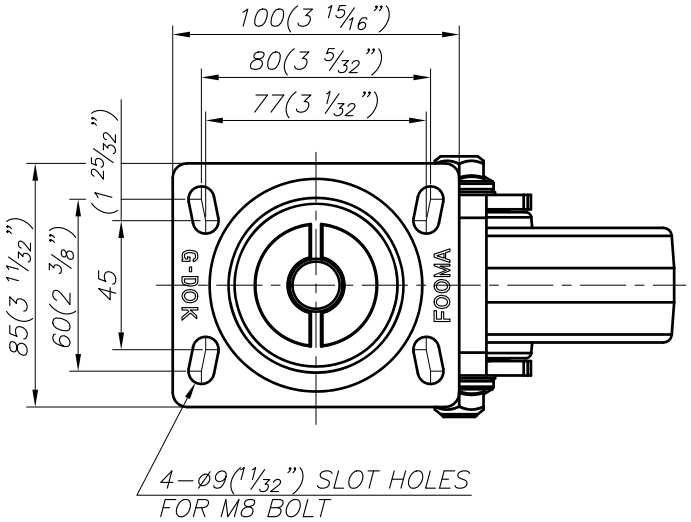

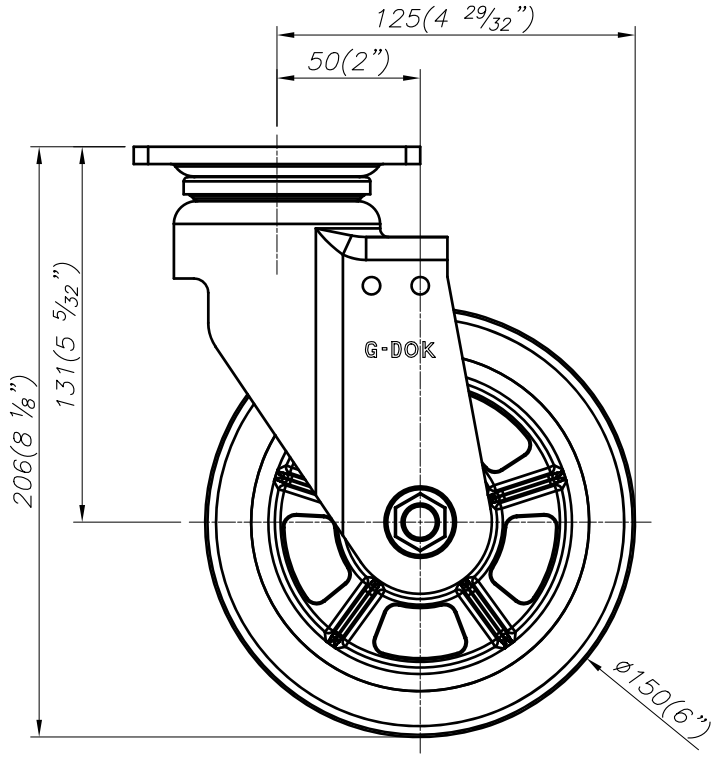

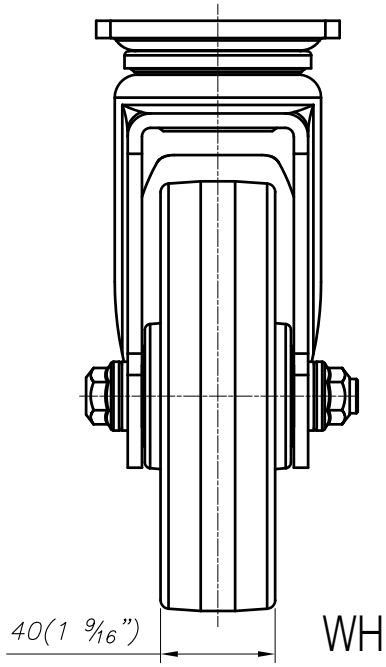

WHEEL : HUD, MUD, SUD

FOOT MASTER ®	FOOMA ®	G-DOK IND.	MODEL NAME	PH-150-ASF

FOOT MASTER G-DOK IND.

FOOT MASTER G-DOK IND.

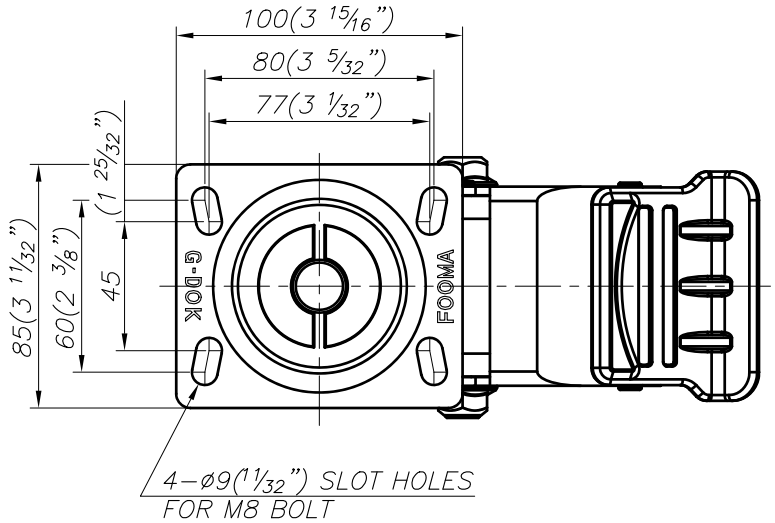

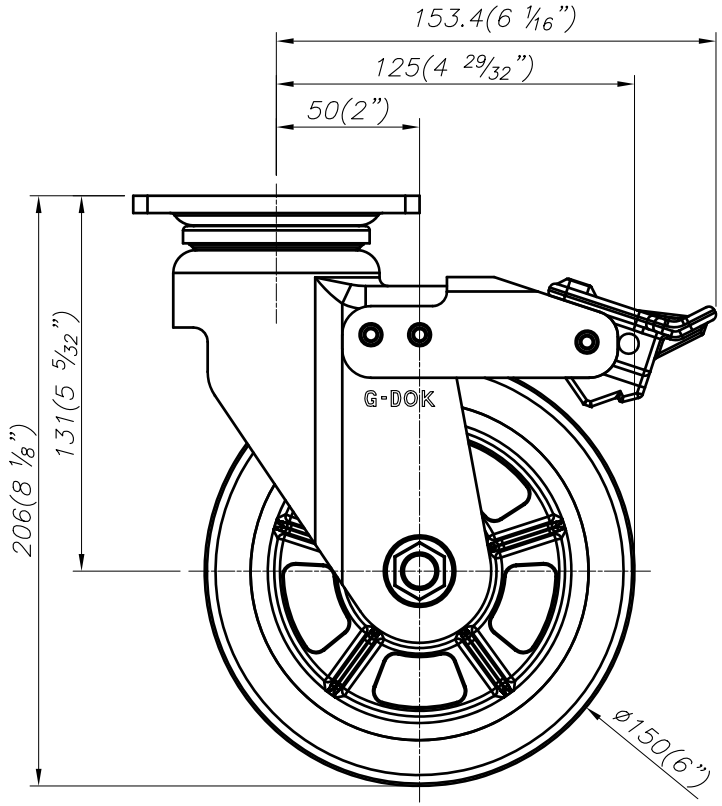

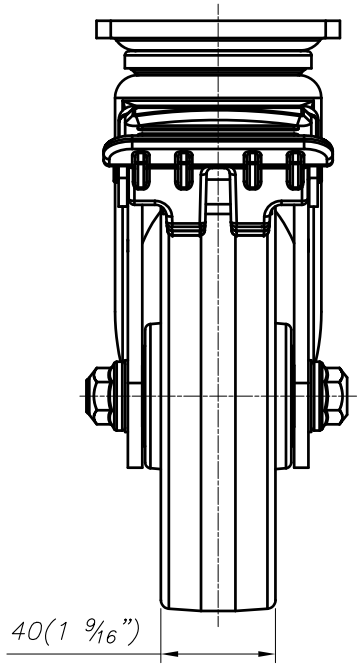

WHEEL : HUD, MUD, SUD

FOOT MASTER ®	FOOMA ®	G-DOK IND.	MODEL NAME	PH-150-BSF

FOOT MASTER G-DOK IND.

FOOT MASTER G-DOK IND.

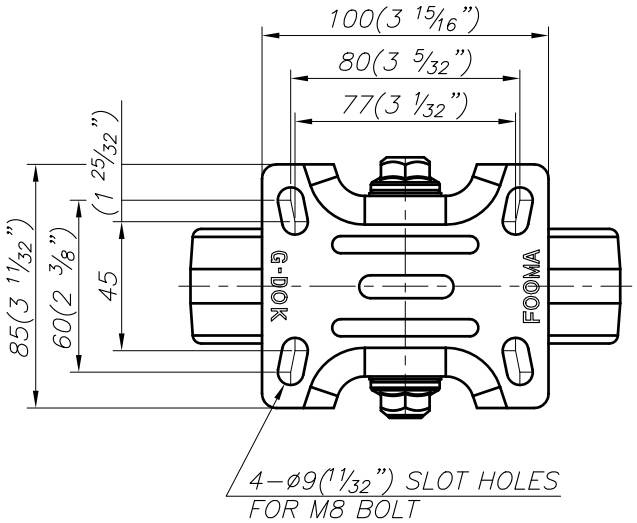

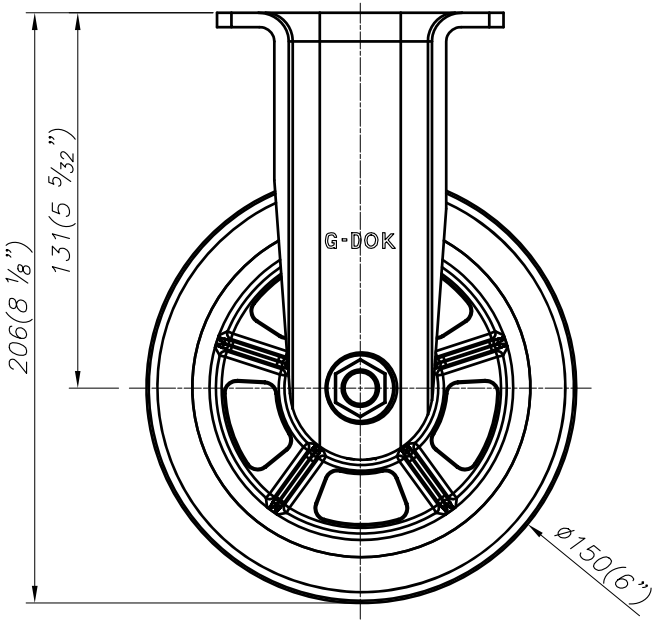

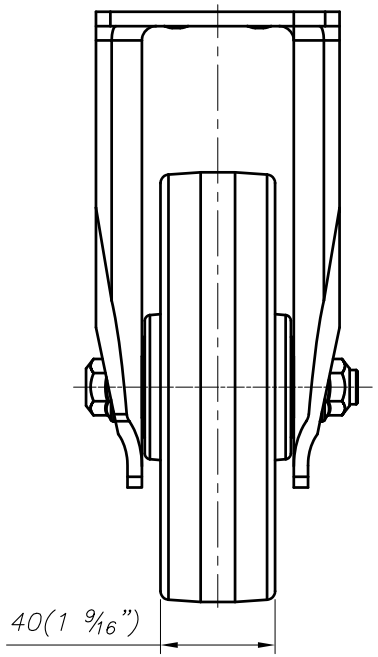

WHEEL : HUD, MUD, SUD

FOOT MASTER ®	FOOMA ®	G-DOK IND.	MODEL NAME	PH-150-ARF

FOOT MASTER G-DOK IND.

FOOT MASTER G-DOK IND.