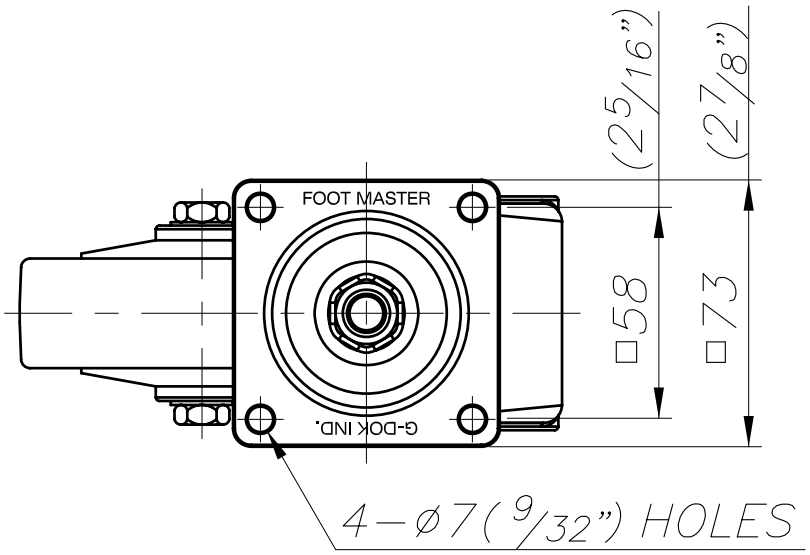

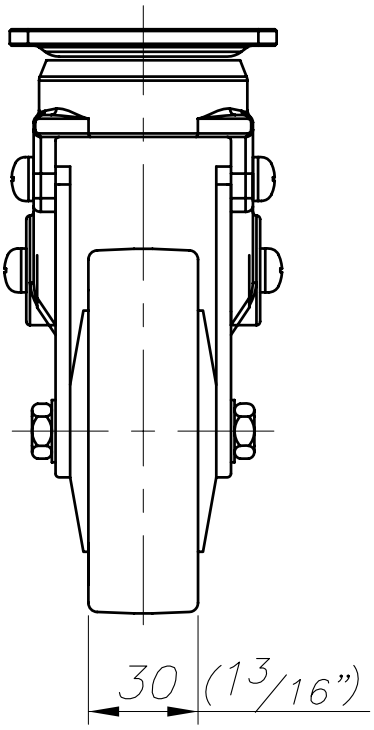

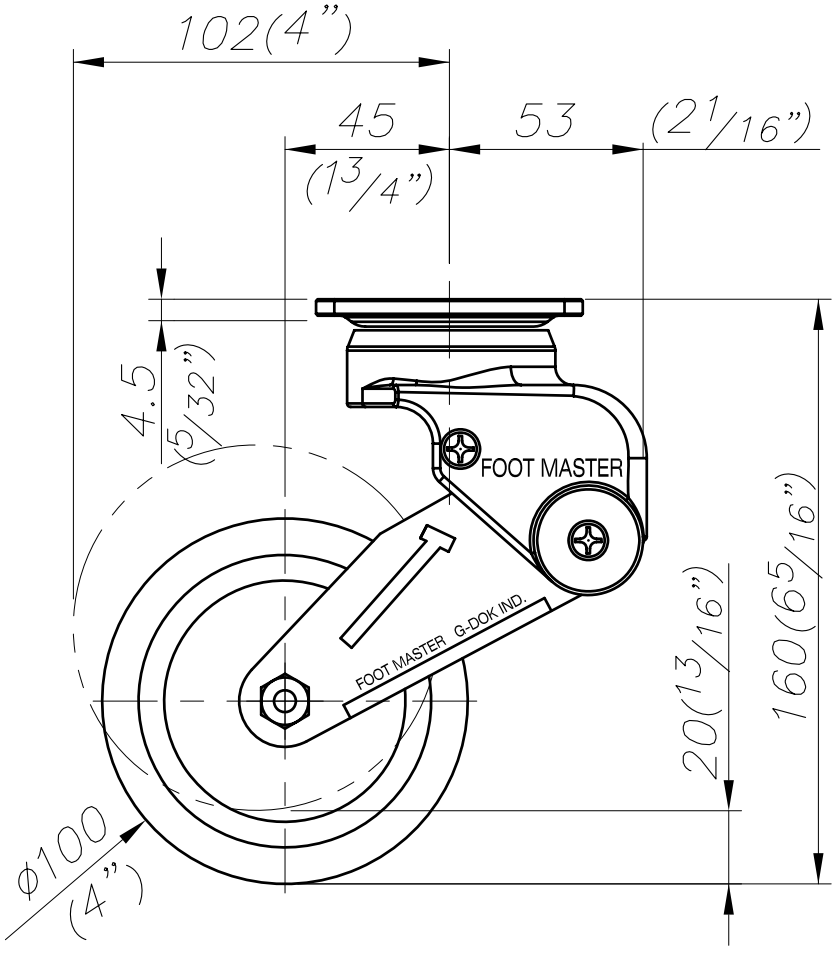

FOOT MASTER ®	FOOMA ®	G−DOK IND.	MODEL NAME	GDS-100-ASF,ARF

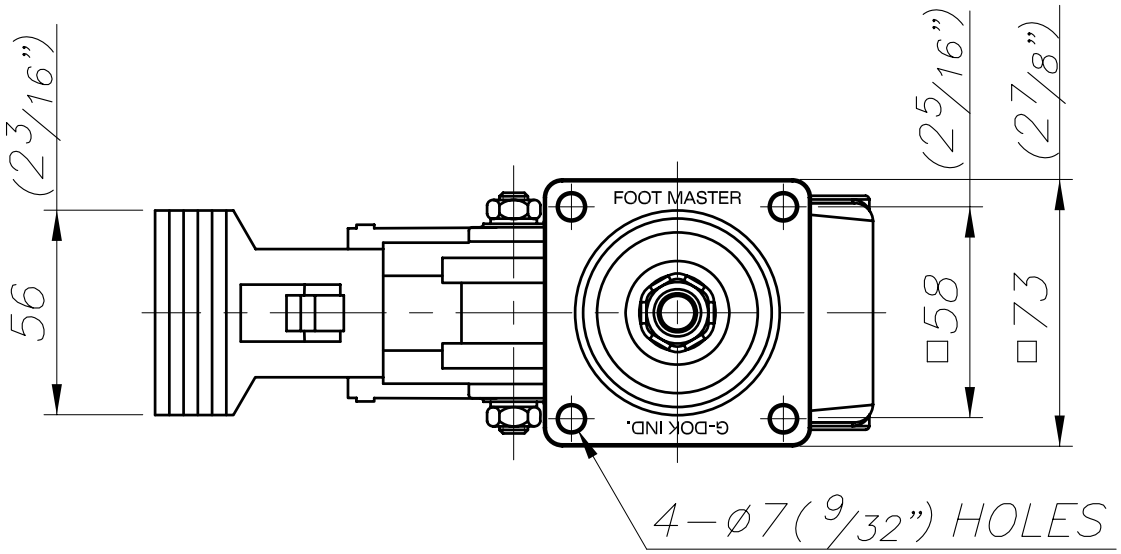

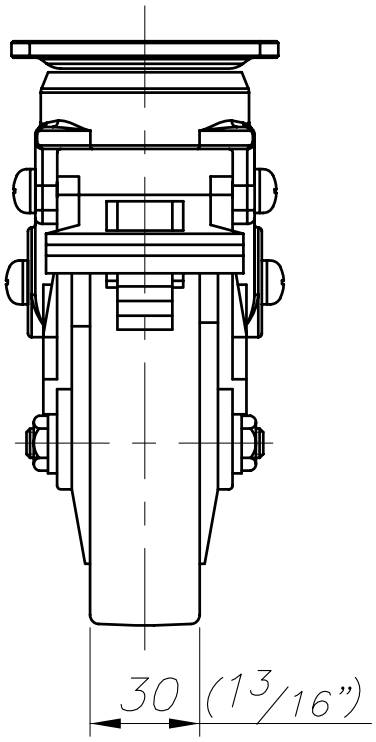

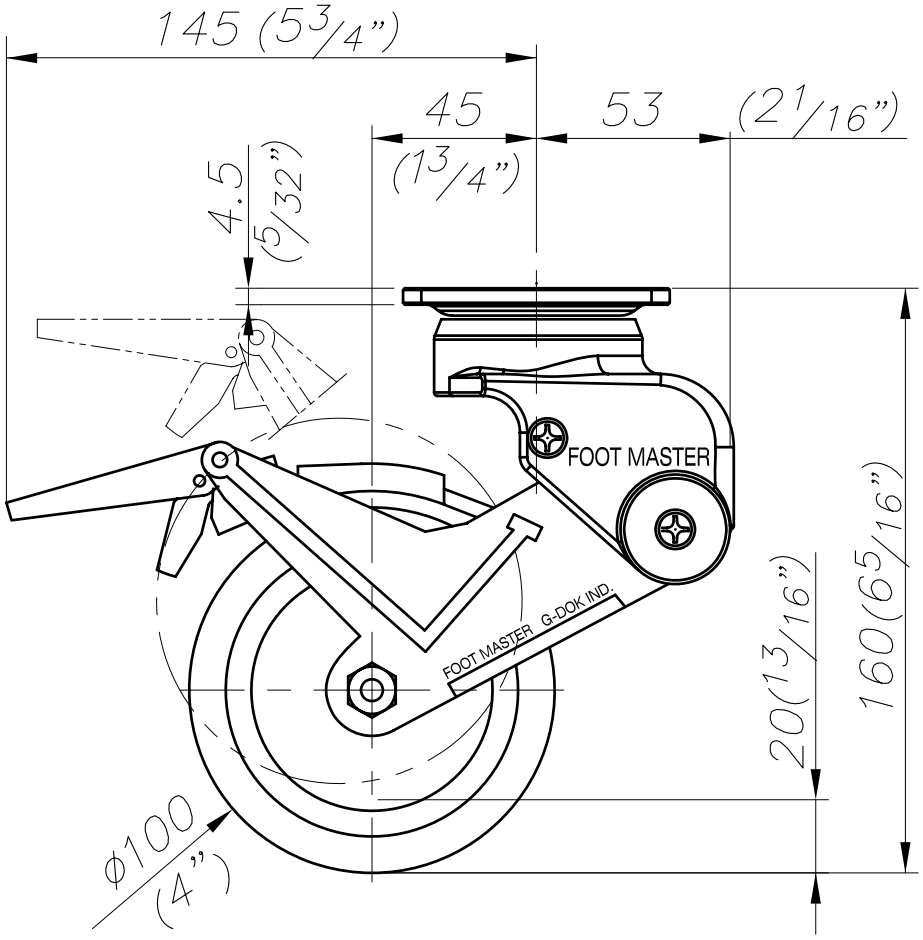

FOOT MASTER ®	FOOMA ®	G−DOK IND.	MODEL NAME	GDS-100-BSF,BRF

A B C E F G